EVEREADY BATTERY CO.
Internet: www.energizer.com

1-800-383-7323 / USA
1-800-383-7323 / CANADA
+ 44 (0) 208 920 2306 / EUROPE

ENERGIZER NO. CH1HR

Battery Charger

LISTED/INSCRIT

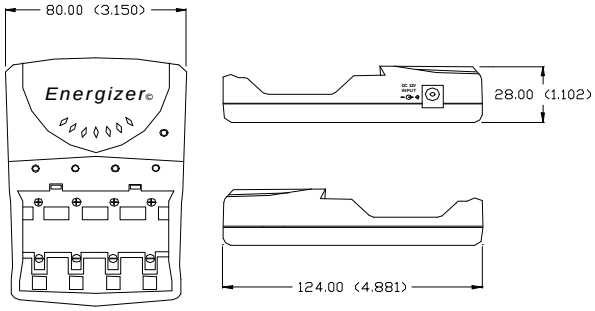

Dimensions in mm (inches)

Features:

1. "Smart Charger" - Individually monitors cell condition and terminates charging current when charged.
2. Charges AA & AAA size batteries.
3. Includes "Trickle Charge" - Low rate charge to retain charge level that would otherwise be lost due to self-discharge and storage.
4. LED monitoring lights
5. Charger for NiMH batteries.
6. AC input 100-240 volts, 50/60 HZ.

Product Detail:

Designation:	Hi-Energy Battery Charger
Color:	Silver
Charge Capability:	One to Four "AA" NiMH Batteries One to Four "AAA" NiMH Batteries
Charging Current:	"AA" (1-4 cells) - 1800 mA "AAA" (1-4 cells) - 800 mA
Trickle Charge:	"AA" - 50 mA "AAA" - 50 mA
Charging Time:	1 Hour
Typical Weight:	118.5 grams (4.2 oz.) Without AC Adapter
Operating: Temp:	0° to 45° C
Dimensions (mm):	124.00 x 28.00 x 80.00

Charging Instructions:

1. This charger must NOT be used for Alkaline, Carbon Zinc, Lithium or other kinds of batteries not specified on this charger.
2. Plug the DC output plug of the adapter into the DC input jack of the charger.
3. Plug the adapter into a standard AC outlet and then the green LED should light.
4. Place 1-4 batteries into the battery compartment according to the polarity symbols (+ and -) marked inside each bay. Note: each channel has its own red LED indicator that lights when the battery in that channel is charging.
5. The red LED indicator turns off, when the battery in that channel is fully charged.
6. It is normal for the batteries to be warm while charging.

Important Safety Instructions:

For indoor use only. Never use an extension cord or attachment not recommended by Energizer, as this may result in fire, electrical shock or injury.

Do not operate charger if it has been subjected to shock or damage. Do not disassemble the charger. Always unplug the charger from outlet before attempting any maintenance or cleaning.

Never alter the plug provided, and do not use as a power source for any electrical equipment. This charger is not intended for use by young children or infirm persons without supervision.

Young children should be supervised to ensure they do not play with the charger.

Important Notice

This data sheet contains information specific to battery chargers manufactured at the time of its publication.
Contents herein do not constitute a warranty.

Copyright © Eveready Battery Co. Inc. - All Rights Reserved